DATA SHEET

SMV1405 to SMV1413 Series: Hermetic Ceramic Packaged Silicon Abrupt Junction Varactors

Applications

- VCO applications up to 18 GHz
- Voltage tuned filters
- Voltage variable phase shifters

Features

- High Q
- Low series resistance for low phase noise
- Multiple hermetic packages
- Packages rated MSL1, 260 °C per JEDEC J-STD-020

Description

The SMV1405 to SMV1413 group of silicon abrupt junction varactor diodes is designed for use in Voltage Controlled Oscillators (VCOs) requiring tight capacitance tolerances. The low resistance of these varactors makes them appropriate for high-Q resonators in wireless system VCOs to frequencies up to 18 GHz. This family of varactors is characterized for capacitance over temperature.

Table 1 lists the various packages and part numbers of the SMV1405-SMV1413 group of varactors.

Table 1. Hermetic Packaged Abrupt Junction Tuning Varactor Devices

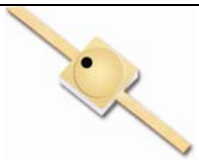			
Hermetic Stripline 240	**Hermetic Pill 203**	**Stripline 219**	**Coaxial 210**
SMV1405-240	SMV1405-203	SMV1405-219	SMV1405-210
SMV1408-240	SMV1408-203	SMV1408-219	SMV1408-210
SMV1413-240	SMV1413-203	SMV1413-219	SMV1413-210
Ls = 0.55 nH	Ls = 0.40 nH	Ls = 0.50 nH	Ls = 0.45 nH

Electrical and Mechanical Specifications

The absolute maximum ratings of the SMV1405 to SMV1413 varactors are provided in Table 2. Electrical specifications are provided in Table 3. Typical capacitance values are listed in Table 4. Typical performance characteristics of the SMV1405 to SMV1413 varactors are illustrated in Figures 1 and 2.

The SPICE model for the SMV1405 to SMV1413 varactors is shown in Figure 3 and the associated model parameters are provided in Table 5.

Package dimensions are shown in Figures 4 to 7. The SMV1405 to SMV1413 series of varactors are not delivered on carrier tapes.

Table 2. SMV1405 to SMV1413 Series Absolute Maximum Ratings[1]

Parameter	Symbol	Minimum	Typical	Maximum	Units
Reverse voltage	V_R			30	V
Forward current	I_F			20	mA
Power dissipation	P_D			250	mW
Operating temperature	T_{OP}	–55		+125	°C
Storage temperature	T_{STG}	–55		+150	°C
Electrostatic discharge: Human Body Model (HBM), Class 0	ESD			< 250	V

[1] Exposure to maximum rating conditions for extended periods may reduce device reliability. There is no damage to device with only one parameter set at the limit and all other parameters set at or below their nominal value. Exceeding any of the limits listed here may result in permanent damage to the device.

***ESD HANDLING**: Although this device is designed to be as robust as possible, electrostatic discharge (ESD) can damage this device. This device must be protected at all times from ESD when handling or transporting. Static charges may easily produce potentials of several kilovolts on the human body or equipment, which can discharge without detection. Industry-standard ESD handling precautions should be used at all times.*

Table 3. SMV1405 to SMV1413 Series Electrical Specifications[1]
(T_{OP} = 25 °C, Unless Otherwise Noted)

Part Number	Voltage Breakdown @ 10 mA (V)	Total Capacitance (C_T) @ 4 V (pF)		Capacitance Ratio C_{T0}/C_{T30}	Series Resistance (R_S) @ 4 V, f = 500 MHz (Ω)	Q @ 4 V (50 MHz)
	Minimum	Minimum	Maximum	Minimum	Maximum	Typical
SMV1405-203	30	1.20	1.48	3.80	0.8	3200
SMV1405-210	30	1.28	1.54	3.60	0.8	3200
SMV1405-219	30	1.20	1.48	3.80	0.8	3200
SMV1405-240	30	1.20	1.48	3.80	0.8	3200
SMV1408-203	30	1.73	2.11	4.10	0.6	2900
SMV1408-210	30	1.82	2.23	4.00	0.6	2900
SMV1408-219	30	1.73	2.11	4.10	0.6	2900
SMV1408-240	30	1.73	2.11	4.10	0.6	2900
SMV1413-203	30	3.77	4.60	4.00	0.35	2400
SMV1413-210	30	3.60	4.44	4.00	0.35	2400
SMV1413-219	30	3.77	4.60	4.00	0.35	2400
SMV1413-240	30	3.65	4.45	4.00	0.35	2400

[1] Performance is guaranteed only under the conditions listed in this table.

Table 4. Capacitance vs Reverse Voltage

V_R (V)	C_T (pF)		
	SMV1405	SMV1408	SMV1413
0	2.67	4.08	9.24
0.5	2.12	3.36	7.39
1.0	1.84	2.94	6.37
1.5	1.70	2.60	5.71
2.0	1.55	2.38	5.22
2.5	1.44	2.24	4.85
3.0	1.34	2.08	4.55
4.0	1.25	1.88	4.10
5.0	1.17	1.72	3.77
10.0	0.95	1.28	2.85
20.0	0.77	1.01	2.12
30.0	0.63	0.95	1.77

Typical Performance Characteristics

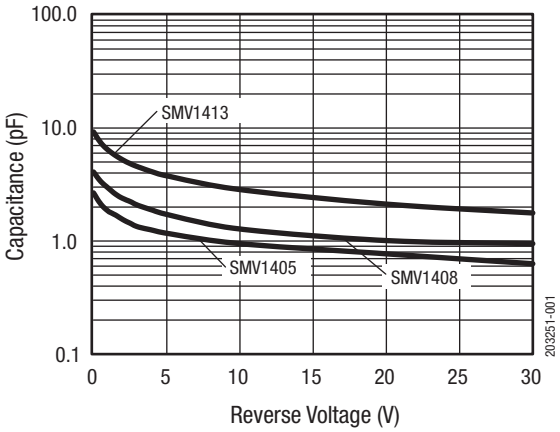

Figure 1. Capacitance vs Reverse Voltage

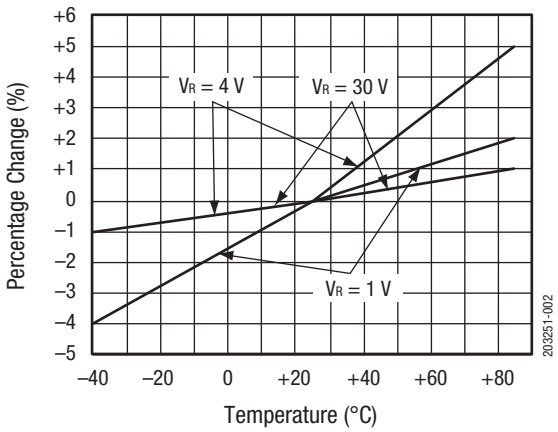

Figure 2. Relative Capacitance Change vs Temperature

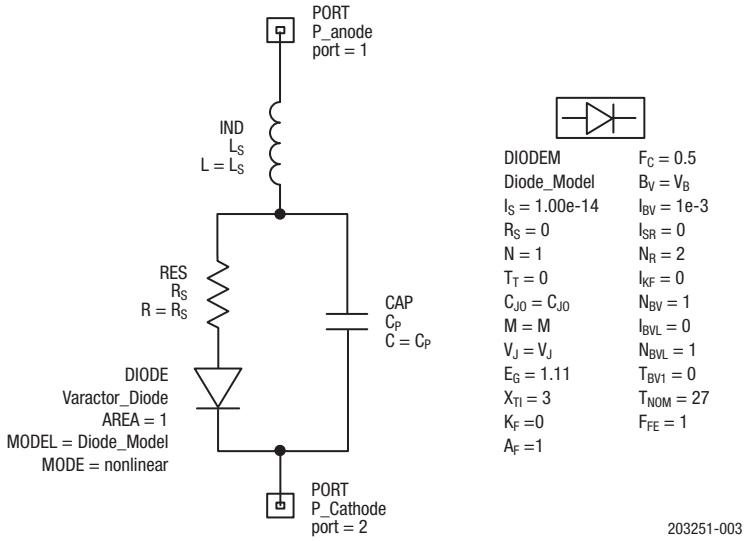

Figure 3. SPICE Model

Table 5. SPICE Model Parameters

Part Number	C_{JO} (pF)	V_J (V)	M	C_P (pF)	R_S (Ω)
SMV1405	2.37	0.77	0.5	0.29	0.80
SMV1408	3.89	0.92	0.5	0.21	0.60
SMV1413	8.92	0.87	0.5	0.30	0.35

Values extracted from measured performance.
For package inductance,L_S, refer to Table 1.
For more details, refer to the Skyworks Application Note, *Varactor SPICE Model for Approved RF VCO Applications*, document number 200315.

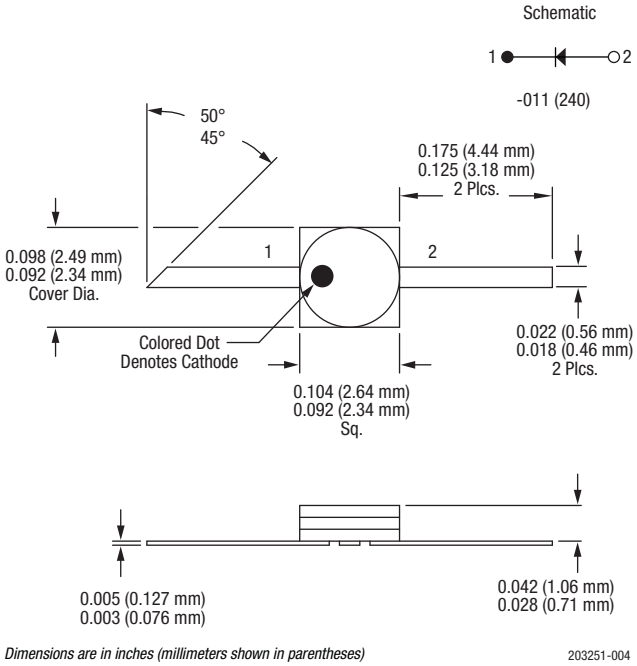

Figure 4. -240 Package Dimensions

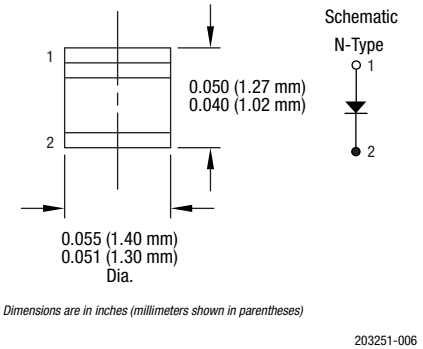

Figure 5. -203 Package Dimensions

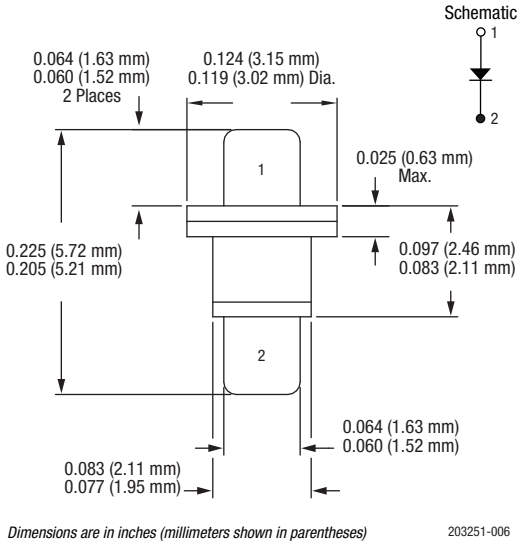

Figure 6. -210 Package Dimensions

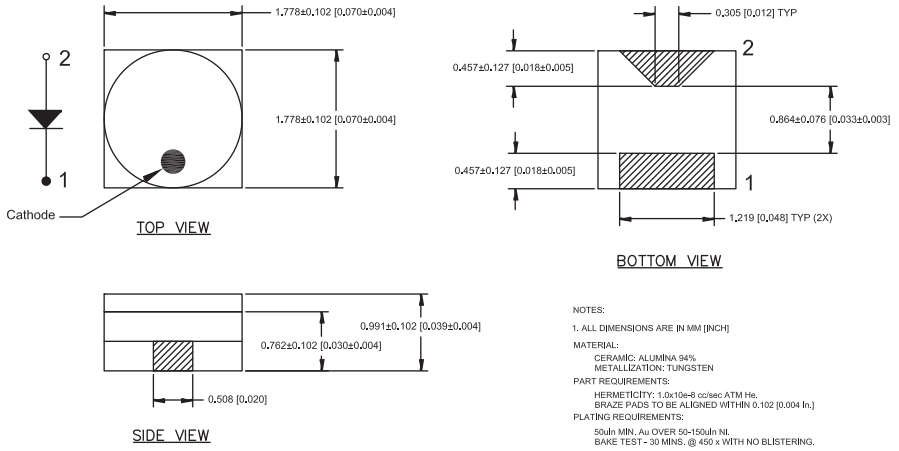

Version A

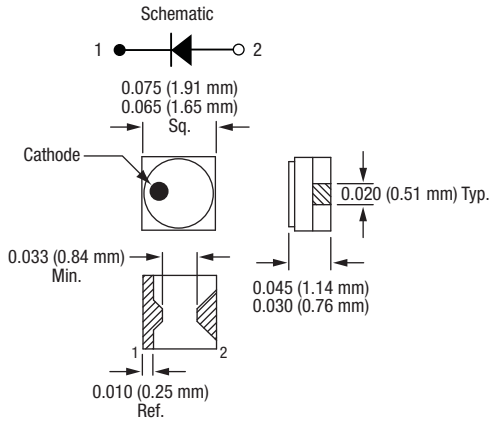

Dimensions are in inches (millimeters shown in parentheses)

Version B

203251-007

Figure 7. -219 Package Dimensions